S SERIES PUMPS / S SERİSİ POMPALAR

Investment Casting, All Parts Stainless Steel AISI316 Centrifugal Pump

Hassas Döküm, Komple Paslanmaz AISI 316L Santrifüj Pompalar

TECHNICAL DATA / TEKNİK DATA

- **Fluid Temperature / Akışkan Sıcaklığı : Between -10°C and 150°C / -10°C ile 150°C Arası**
- **Maximum Pressure / Azami Basınç : 55 m**
- **Maximum Capacity / Azami Debi : 130 m³/h**
- **Max. Motor Speed / Max. Motor Hızı : 3000 rpm / 3000 Devir/Dakika**
- **Motor Protection / Motor Koruma Sınıfı: IP 55**
- **Motor Insulation / Motor Insulation : Class F / F Sınıfı**

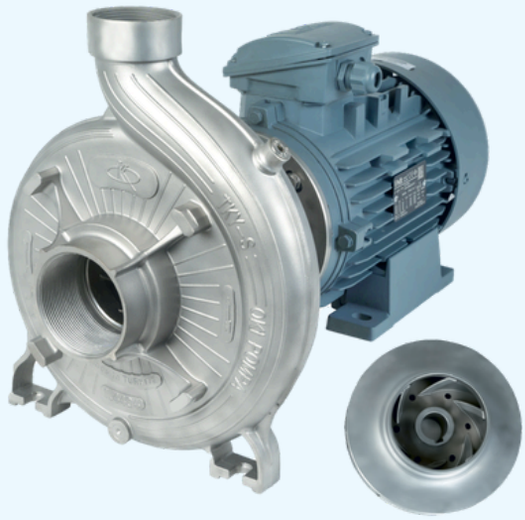

PUMP DESIGNATION / POMPA ADI

TKY SP 50- 200 5,5KW 3000rpm A-Si-Si-Vt

- A-Si-Si-Vt — Mechanical Seal Code / Mekanik Salmastra Kodu
- 3000rpm — Motor Speed / Motor Hızı
- 5,5KW — Motor Power / Motor Gücü
- 200 — Nominal Impeller Diameter(mm) / Nominal Fan Çapı(mm)
- 50 — Discharge Nozzle(mm) / Çıkış Büyüklüğü(mm)
- TKY SP — Pump Type / Pompa Tipi

HYDRAULIC PERFORMANCE TABLE / HİDROLİK PERFORMANS TABLOSU

3000 rpm / 3000 Devir/Dakika

POMPA TYPE	POWER		INLET SIZE	OUTLET SIZE	l/min	0	333	666	1000	1166	1333	1500	1666	1833
	KW	HP			m³/h	0	20	40	60	70	80	90	100	110
TKY SP 50-200	5,5	7,5	2 1/2"	2"	H (m)	-	35	32	28					
TKY SP 50-200	7,5	10	2 1/2"	2"		-	38	36	33	30				
TKY SP 50-200	9,2	12	2 1/2"	2"		-	42	40	38	33				
TKY SP 50-200	11	15	2 1/2"	2"		-	46	44	41	38	33			
TKY SP 50-200	15	20	2 1/2"	2"		-	49	48	45	43	39	35	30	
TKY SP 50-200	18,5	25	2 1/2"	2"		-	57	55	53	50	48	43	40	35

1500 rpm / 1500 Devir/Dakika

POMPA TYPE	POWER		INLET SIZE	OUTLET SIZE	l/min	0	416	500	583	666	750	833	916	1000
	KW	HP			m³/h	0	25	30	35	40	45	50	55	60
TKY SP 50-200	1,1	1,5	2 1/2"	2"	H (m)	11	10	9	7					
TKY SP 50-200	1,5	2	2 1/2"	2"		11,5	10,8	10	8,8	7				
TKY SP 50-200	2,2	3	2 1/2"	2"		13	12,4	11,8	11,2	10,4	9,6	8,6	7,6	
TKY SP 50-200	3	4	2 1/2"	2"		14,5	14	13,4	12,8	12,2	11,2	10,2	9,2	8,1

ASSEMBLY DRAWINGS / MONTAJ ÇİZİMİ

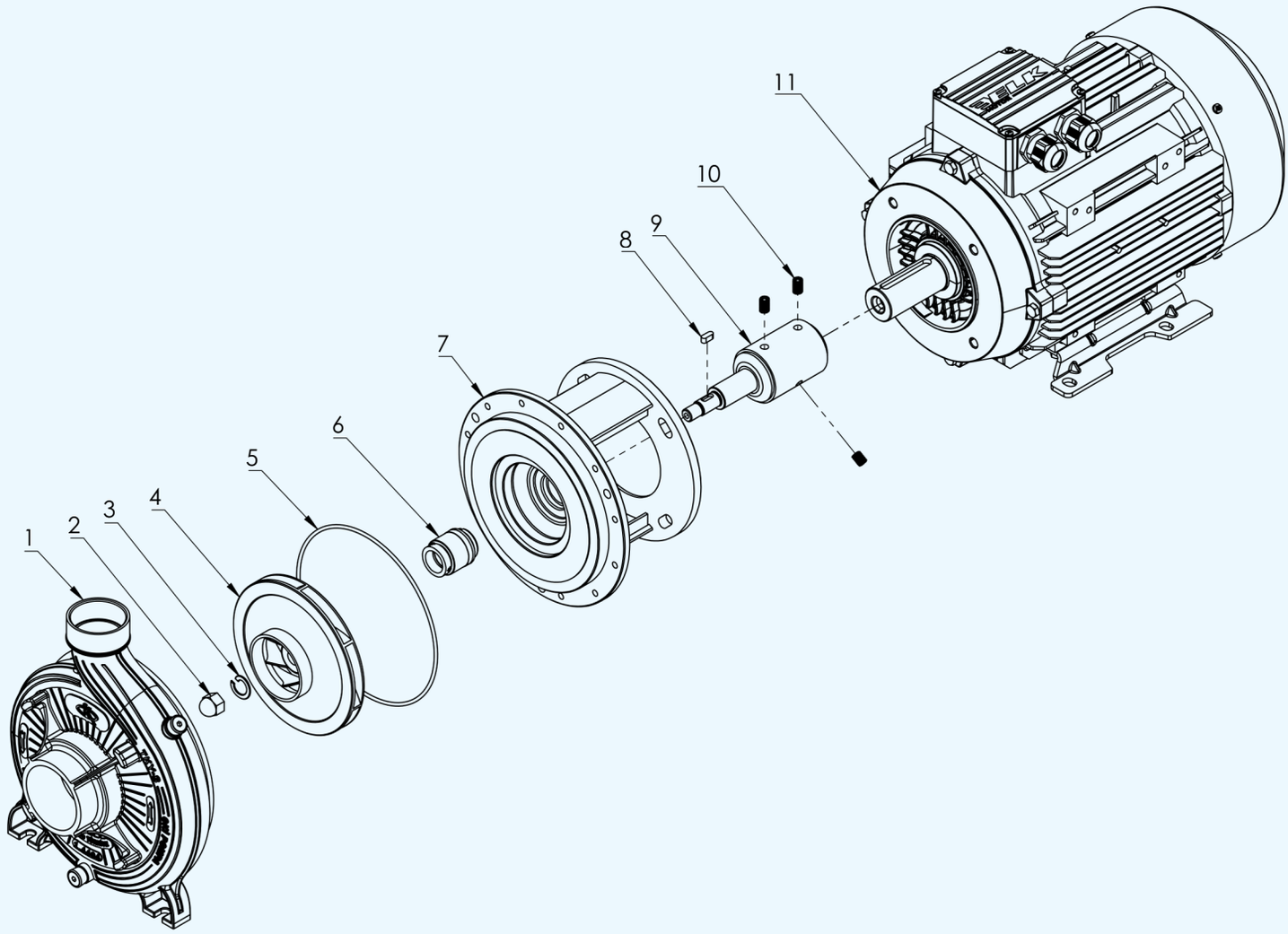

Part No	PART NAME	QTY	MATERİAL
1	CASING S	1	AISI 316
2	NUT	1	AISI 316
3	WASHER	3	AISI 316
4	IMPELLER	1	AISI 316
5	ORING	1	AISI 316
6	MECHANICAL SEAL	1	VİTON
7	PEDESTAL	1	AISI 316
8	IMPELLER KEY	1	AISI 316
9	PUMP SHAFT	1	AISI 316
10	SETSKUR	3	AISI 316
11	MOTOR	1	-

DIMENSIONS / ÖLÇÜLENDİRME

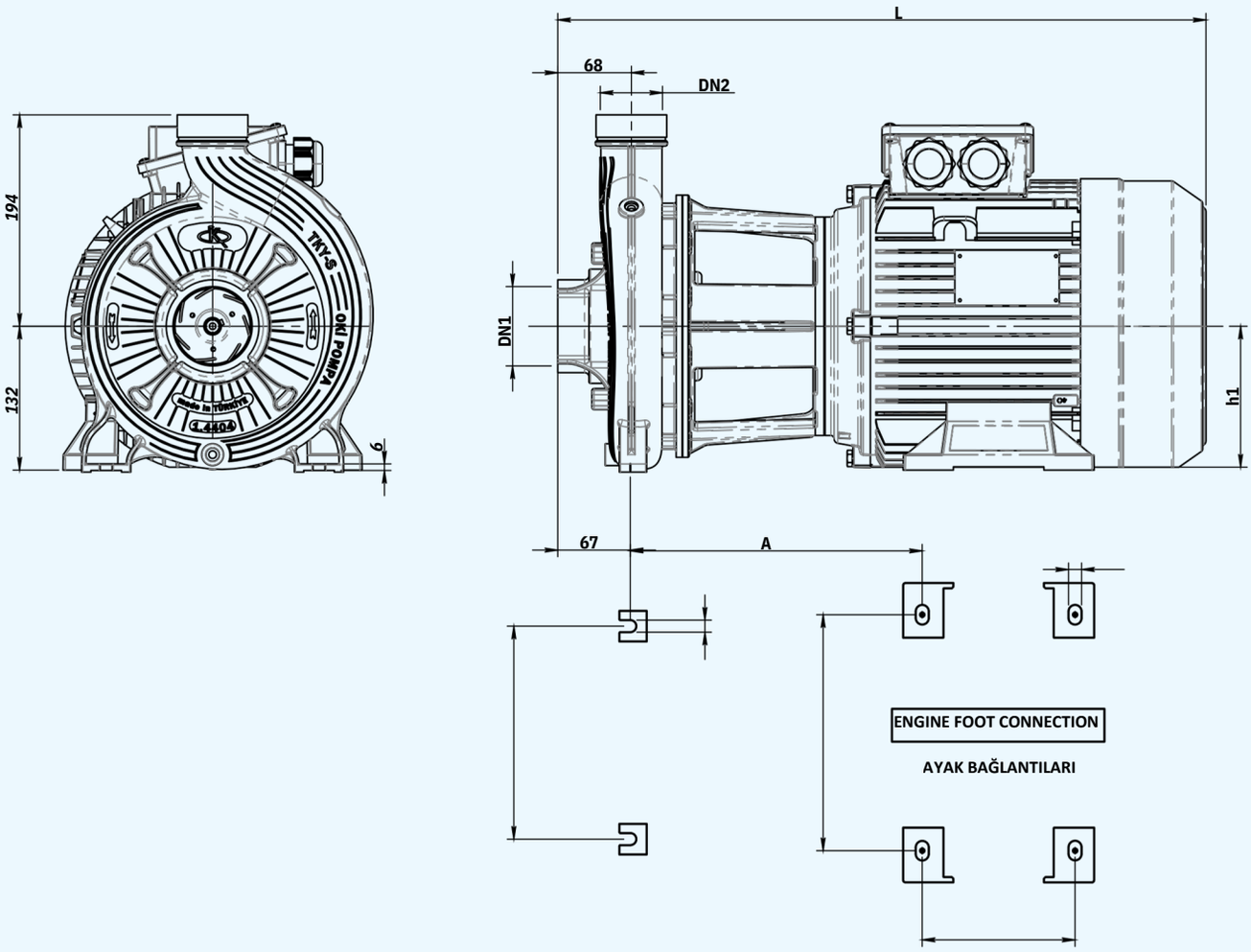

PUMP TYPE	INLET (DN1	OUTLET (DN2)	A	B	C	D	H1
TKY SP 32-200 / 1,1	2 1/2"	2"	200	140	125	10	90
TKY SP 32-200 / 1,5	2 1/2"	2"	200	140	125	10	90
TKY SP 32-200 / 2,2	2 1/2"	2"	200	140	125	10	90
TKY SP 32-200 / 3	2 1/2"	2"	217	160	140	12	100
TKY SP 32-200 / 5,5	2 1/2"	2"	268	216	140	12	132
TKY SP 32-200 / 7,5	2 1/2"	2"	268	216	140	12	132
TKY SP 32-200 / 9,2	2 1/2"	2"	268	216	140	12	132
TKY SP 32-200 / 11	2 1/2"	2"	268	216	140	12	132
TKY SP 32-200 / 15	2 1/2"	2"	331	254	210	15	160
TKY SD 32-200 / 18,5	2 1/2"	2"	331	254	210	15	160

DIMENSIONS / ÖLÇÜLENDİRME

PUMP TYPE	KG	W(cm)	H(cm)	D(cm)	
TKY SP 50-200 / 1,1	35	27	50	36	Box
TKY SP 50-200 / 1,5	36,5	27	50	36	Box
TKY SP 50-200 / 2,2	42,5	27	50	36	Box
TKY SP 50-200 / 3	45,5	27	50	36	Box
TKY SP 50-200 / 5,5	62,5	28	60	37	Box
TKY SP 50-200 / 7,5	71	80	120	150	Pallete
TKY SP 50-200 / 9,2	73	80	120	150	Pallete
TKY SP 50-200 / 11	75	80	120	150	Pallete
TKY SP 50-200 / 15	100	80	120	150	Pallete