H SERIES PUMPS / H SERİSİ POMPALAR

Investment Casting, All Parts Stainless Steel AISI316 Centrifugal Pump

Hassas Döküm, Komple Paslanmaz AISI 316L Santrifüj Pompalar

TECHNICAL DATA / TEKNİK DATA

- **Fluid Temperature / Akışkan Sıcaklığı : Between -10°C and 150°C / -10°C ile 150°C Arası**
- **Maximum Pressure / Azami Basınç : 55 m**
- **Maximum Capacity / Azami Debi : 40 m³/h**
- **Max. Motor Speed / Max. Motor Hızı : 3000 rpm / 3000 Devir/Dakika**
- **Motor Protection / Motor Koruma Sınıfı: IP 55**
- **Motor Insulation / Motor Insulation : Class F / F Sınıfı**

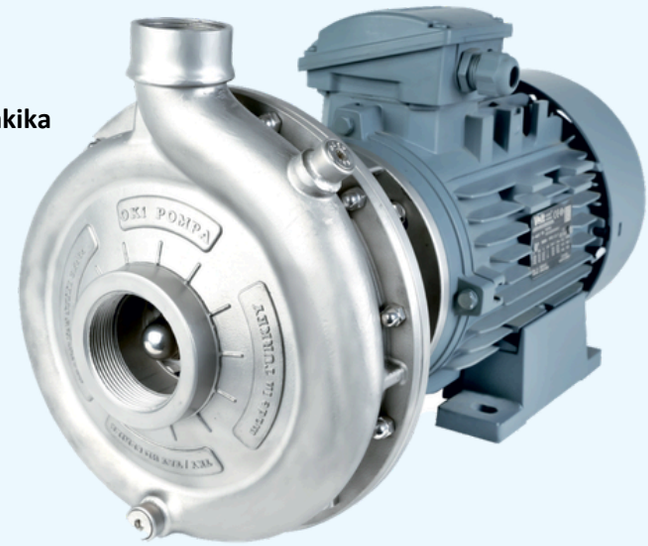

PUMP DESIGNATION / POMPA ADI

TKY HP 32 - 200 5,5KW 3000rpm A-Si-Si-Vt

- A-Si-Si-Vt — Mechanical Seal Code / Mekanik Salmastra Kodu
- 3000rpm — Motor Speed / Motor Hızı
- 5,5KW — Motor Power / Motor Gücü
- 200 — Nominal Impeller Diameter(mm) / Nominal Fan Çapı(mm)
- 32 — Discharge Nozzle(mm) / Çıkış Büyüklüğü(mm)
- TKY HP — Pump Type / Pompa Tipi

HYDRAULIC PERFORMANCE TABLE / HİDROLİK PERFORMANS TABLOSU

3000 rpm / 3000 Devir/Dakika

POMPA TYPE	POWER		INLET SIZE	OUTLET SIZE	l/min	0	83	166	250	333	416	500	583	666
	KW	HP			m³/h	0	5	10	15	20	25	30	35	40
TKY HP 32-200	2,2	3	2"	1 1/4"	H (m)	29	27	25	22	18				
TKY HP 32-200	3	4	2"	1 1/4"		36	34	31	28	24	20			
TKY HP 32-200	4	5,5	2"	1 1/4"		44	42	39	37	32	27			
TKY HP 32-200	5,5	7,5	2"	1 1/4"		51	49	47	44	40	36	30	25	
TKY HP 32-200	7,5	10	2"	1 1/4"		56	54	53	50	47	44	40	35	30

1500 rpm / 1500 Devir/Dakika

POMPA TYPE	POWER		INLET SIZE	OUTLET SIZE	l/min	0	50	100	150	200	250	300	350	400
	KW	HP			m³/h	0	3	6	9	12	15	18	21	24
TKY HP 32-200	1,5	2	2"	1 1/4"	H (m)	13	12,5	12	11	10	8,2	6		
TKY HP 32-200	1,1	1,5	2"	1 1/4"		15	14,5	14	13,3	12,5	11,7	11	10	8

ASSEMBLY DRAWINGS / MONTAJ ÇİZİMİ

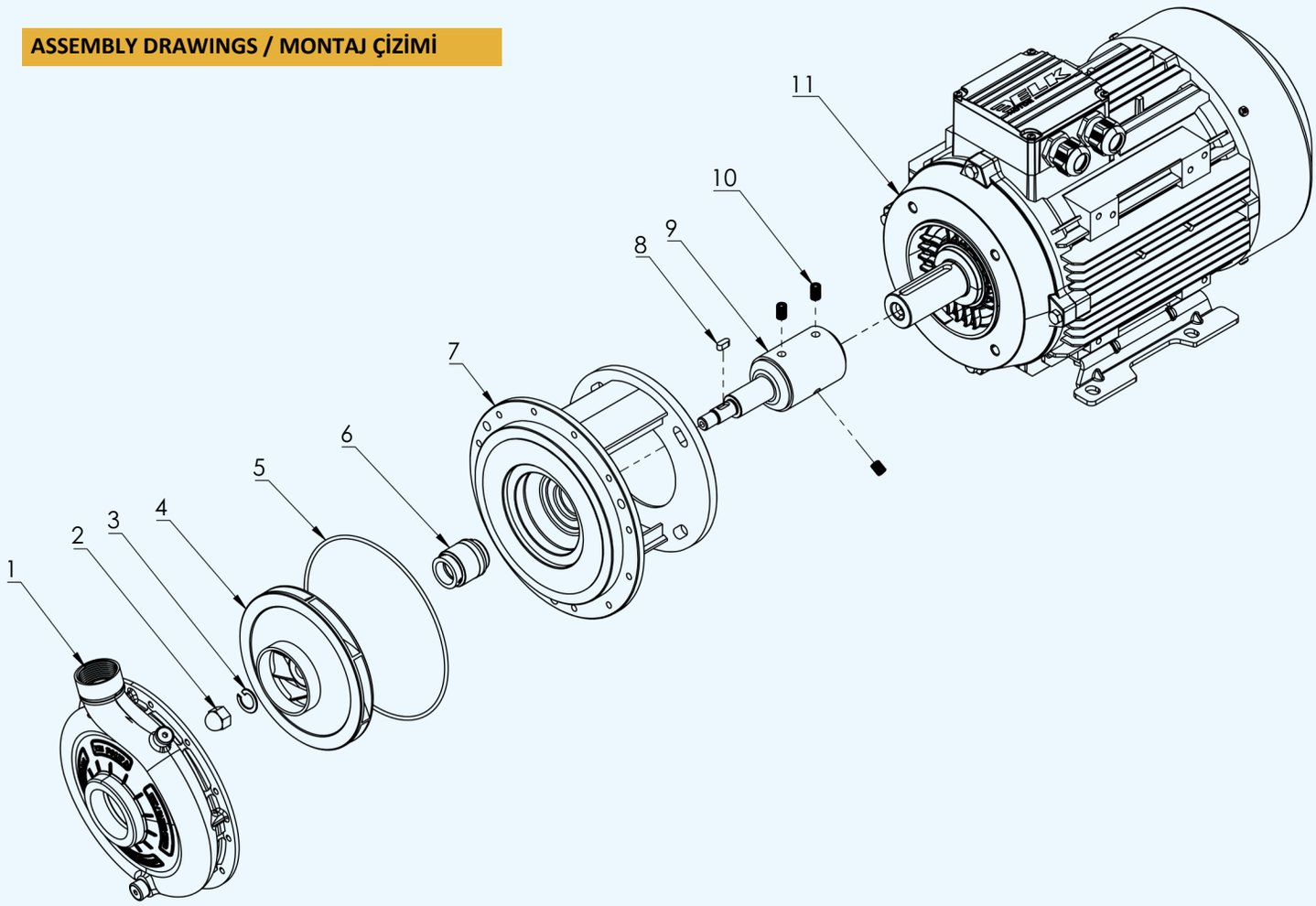

Part No	PART NAME	QTY	MATERİAL
1	CASING H	1	AISI 316
2	NUT	1	AISI 316
3	WASHER	3	AISI 316
4	IMPELLER	1	AISI 316
5	ORING	1	AISI 316
6	MECHANICAL SEAL	1	VİTON
7	PEDESTAL	1	AISI 316
8	IMPELLER KEY	1	AISI 316
9	PUMP SHAFT	1	AISI 316
10	SETSKUR	3	AISI 316
11	MOTOR	1	-

DIMENSIONS / ÖLÇÜLENDİRME

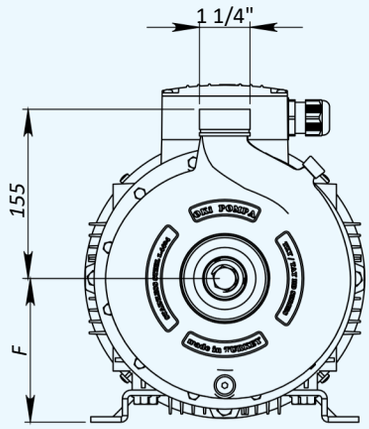

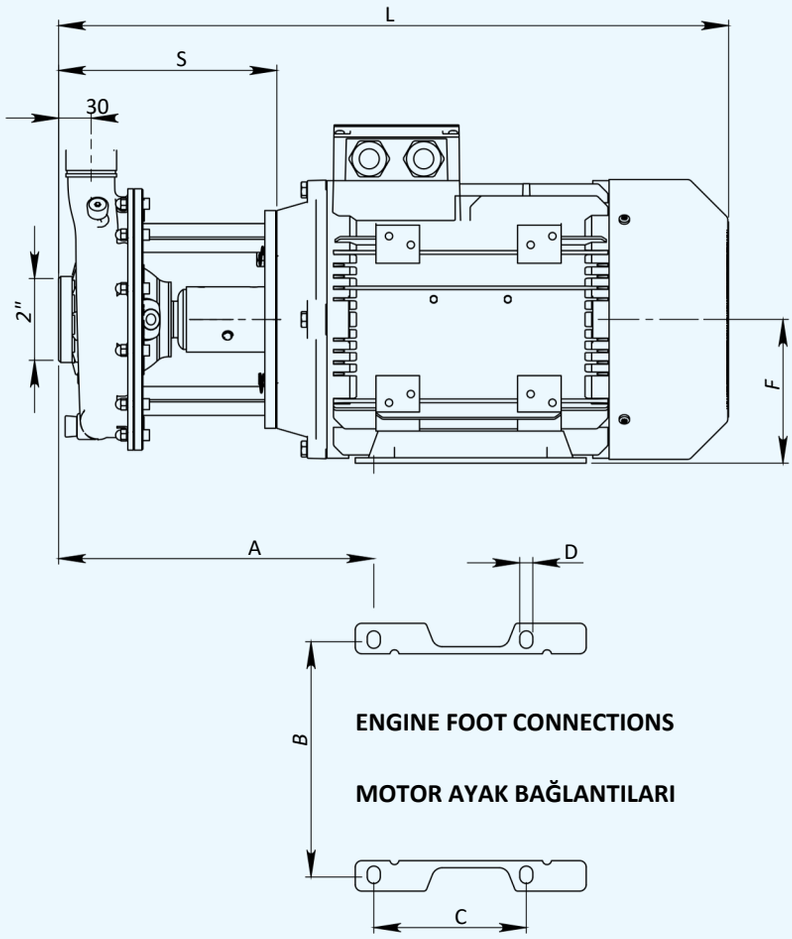

ENGINE FOOT CONNECTIONS

MOTOR AYAK BAĞLANTILARI

PUMP TYPE	INLET	OUTLET	A	B	C	D	L	F
TKY HP 32-200 / 1,1	2"	1 1/4"	221	140	125	10	453	90
TKY HP 32-200 / 1,5	2"	1 1/4"	221	140	125	10	453	90
TKY HP 32-200 / 2,2	2"	1 1/4"	221	140	125	10	453	90
TKY HP 32-200 / 3	2"	1 1/4"	238	160	140	12	490	100
TKY HP 32-200 / 4	2"	1 1/4"	247	190	140	12	507	112
TKY HP 32-200 / 5,5	2"	1 1/4"	291	216	140	12	551	132
TKY HP 32-200 / 7,5	2"	1 1/4"	291	216	140	12	551	132

PACKAGING AND KG DATA / PAKETLEME VE KG BİLGİLERİ

PUMP TYPE	KG	W (cm)	H (cm)	D (cm)
TKY HP 32-200 / 1,1	33	27	50	36
TKY HP 32-200 / 1,5	34	27	50	36
TKY HP 32-200 / 2,2	33	27	50	36
TKY HP 32-200 / 3	40	27	50	36
TKY HP 32-200 / 4	45	28	60	37
TKY HP 32-200 / 5,5	60	28	60	37
TKY HP 32-200 / 7,5	68	28	60	37