TKY D ÖLÇÜ TABLOSU

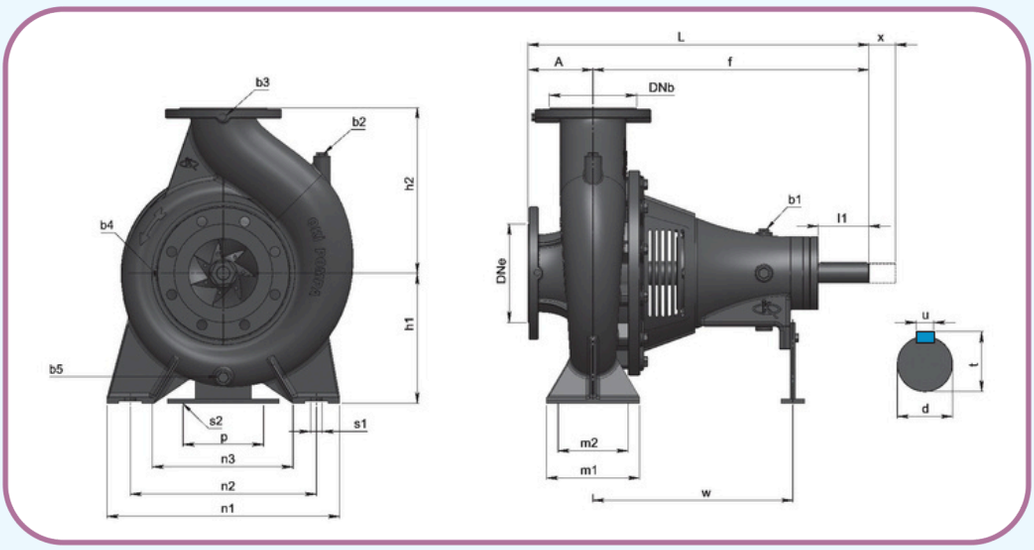

POMPA MODELİ PUMP TYPE	ÖLÇÜLER / DIMENSIONS																								
	DNe	DNb	A	f	L	h1	h2	m1	m2	n1	n2	n3	s1	p	s2	w	d	l1	t	u	b1	b2	b3	b4	b5	x
65-200	80	65	100	360	460	180	225	125	95	320	250	190	14	110	14	260	24	50	27	8	1/4"	1/4"	3/8"	3/8"	3/8"	140
80-250	100	80	125	470	595	200	280	160	120	400	315	240	19	110	14	340	32	80	35	10	1/4"	1/4"	3/8"	3/8"	3/8"	140
80-315	100	80	125	470	595	250	315	160	120	400	315	240	19	110	14	340	32	80	35	10	1/4"	1/4"	3/8"	3/8"	3/8"	140
100-315	125	100	140	470	610	250	315	160	120	400	315	240	19	110	14	340	32	80	35	10	1/4"	1/4"	3/8"	3/8"	3/8"	140
125-250	150	125	140	470	610	250	355	160	120	400	315	240	19	110	14	340	32	80	35	10	1/4"	1/4	3/8"	3/8"	3/8"	140
125-315	150	125	140	530	670	280	355	200	150	500	400	300	23	110	14	360	42	110	45	12	1/4"	1/4	1/2"	1/2"	3/8"	140
150-315	200	150	160	530	690	280	400	200	150	550	450	350	23	110	14	360	42	110	45	12	1/4"	1/4"	1/2"	1/2"	3/8"	140
200-315	250	200	200	750	950	360	480	280	180	600	435	300	35	200	23	540	60	110	64	18	1/4"	1/4"	1/2"	1/2"	3/8"	250
200-340	300	200	200	750	950	360	480	280	180	600	435	300	35	200	23	540	60	110	64	18	1/4"	1/4"	1/2"	1/2"	3/8"	250

MALZEME LİSTESİ

PART	PARÇA LİSTESİ	ADET
1	GÖVDE	1
2	HAVA TAPASI	2
3	FAN 1. SOMUN	1
4	FAN 2. SOMUN	1
5	FAN	1
6	GÖVDE ORİNG	1
7	MEKANİK SALMASTRA	1
8	SALMASTRA YATAĞI	1
9	KAPAK CİVATALARI	4
10	RULMAN YATAK KAPAĞI	1
11	ORİNG	1
12	RULMAN	1
13	YAĞ KEÇESİ	1
14	SEGMAN	1
15	FAN KAMASI	1
16	MİL	1
17	KAMA	1
18	RULMAN YATAĞI	1
19	GÖVDE CİVATASI	12
20	RULMAN YATAK AYAĞI	1
21	YAĞ GÖSTERGE TAPASI	2
22	AYAK CİVATASI	2
23	SEGMAN	1
24	YAĞ KEÇESİ	1
25	RULMAN	1
26	ORİNG	1
27	RULMAN YATAK KAPAĞI	1
28	RULMAN YATAK CİVATASI	4

